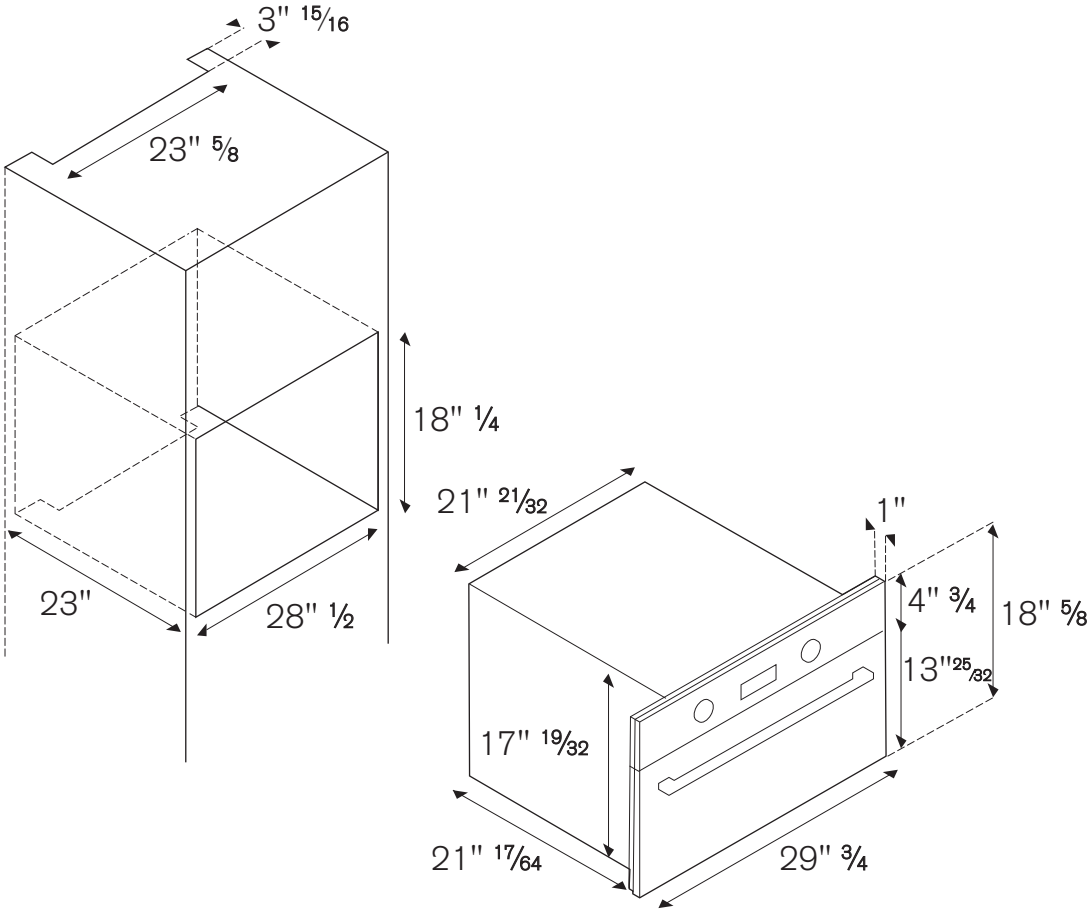
3" 15/16
23" 5/8
18" 1/4
23"
28" 1/2
21" 21/32
1"
4" 3/4
18" 5/8
13"25/32
17" 19/32
21" 17/64
29" 3/4