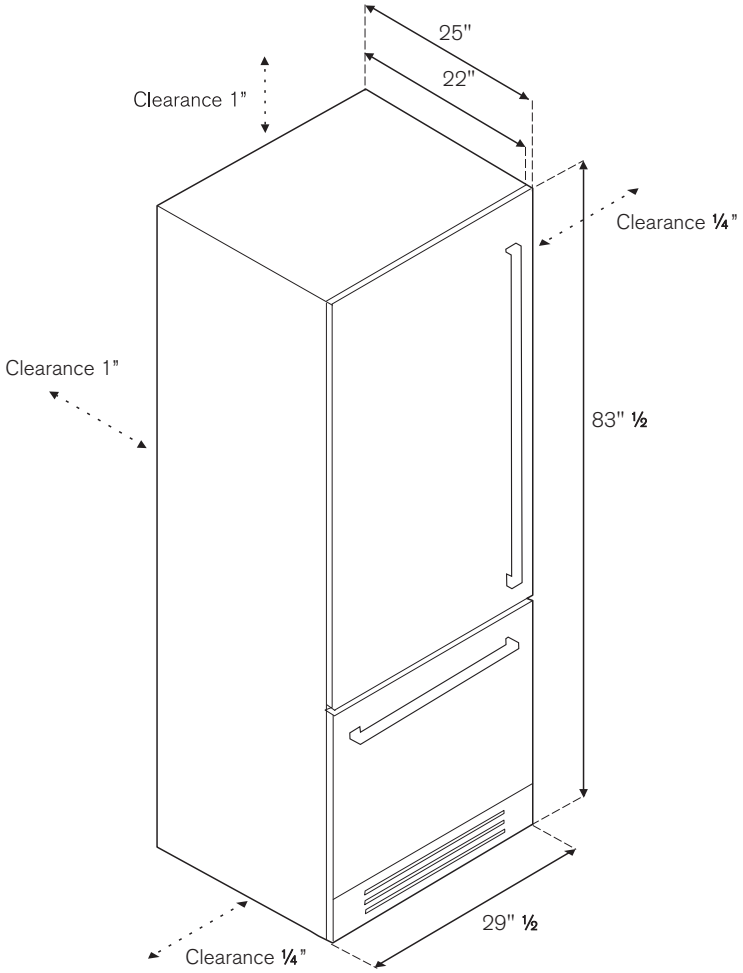
25"
22"
Clearance 1"
Clearance ¼"
Clearance 1"
83" ½
29" ½
Clearance ¼"

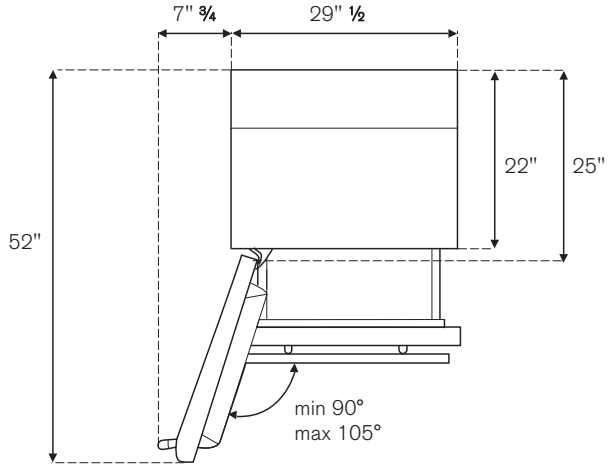
7" ¾
29" ½
22"
25"
52"
min 90°
max 105°

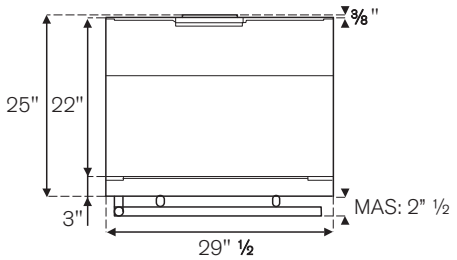
⅜"
25"
22"
3"
MAS: 2" ½
29" ½