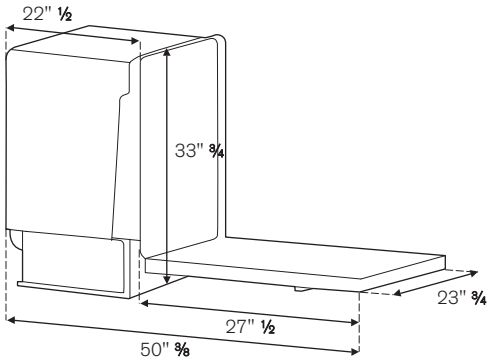
22" ½
33" ¾
23" ¾
27" ½
50" ⅜

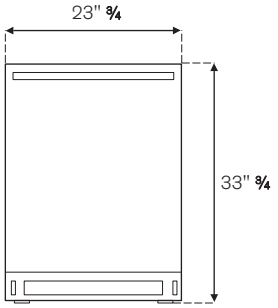
23" ¾
33" ¾

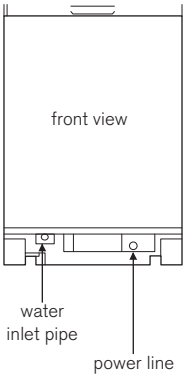
front view
water
inlet pipe
power line

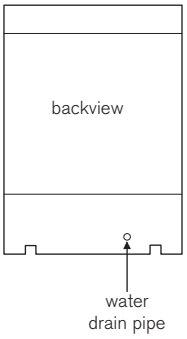
backview
water
drain pipe