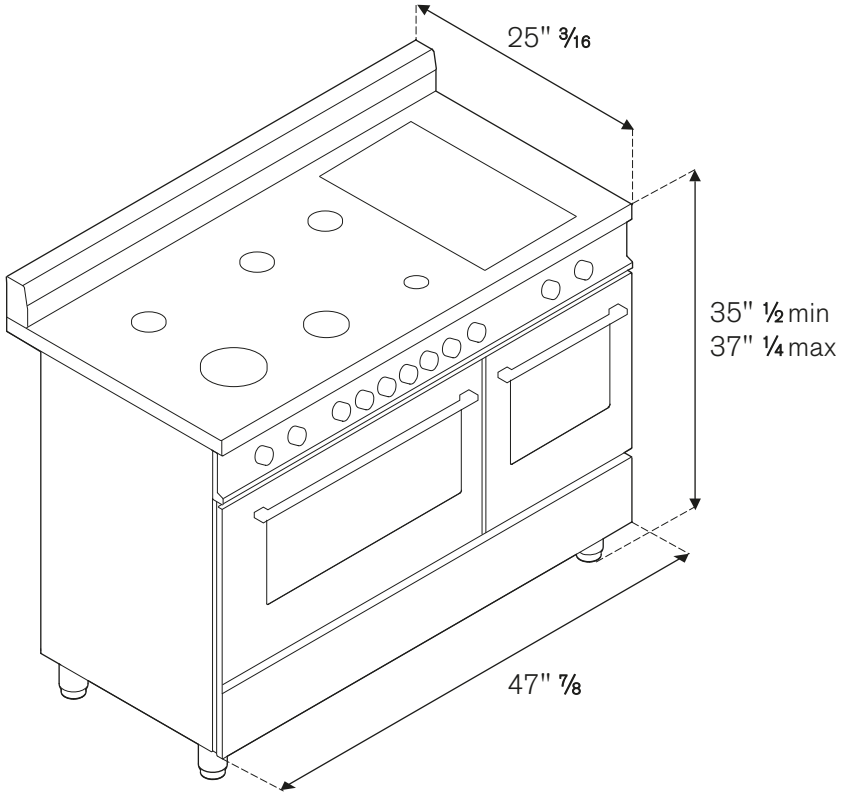
25" 3/16
35" 1/2 min
37" 1/4 max
47" 7/8

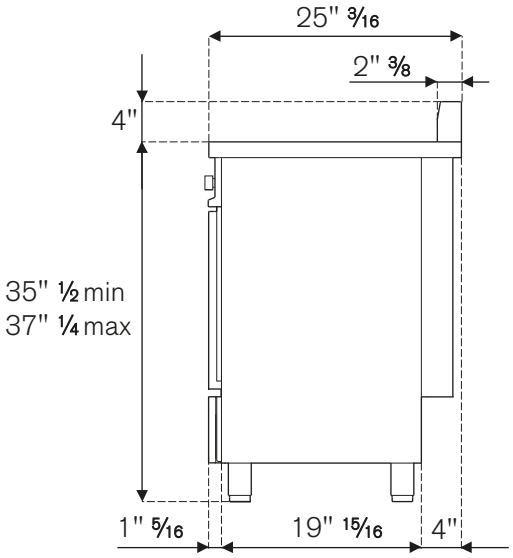
25" 3/16
2" 3/8
4"
35" 1/2 min
37" 1/4 max
1" 5/16
19" 15/16
4"

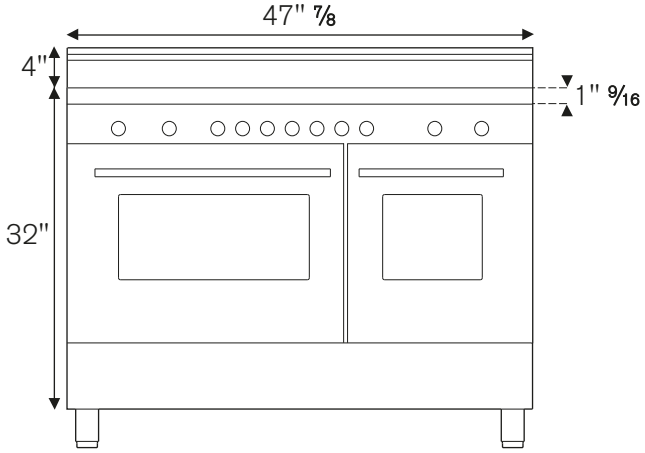
47" 7/8
4"
1" 9/16
32"

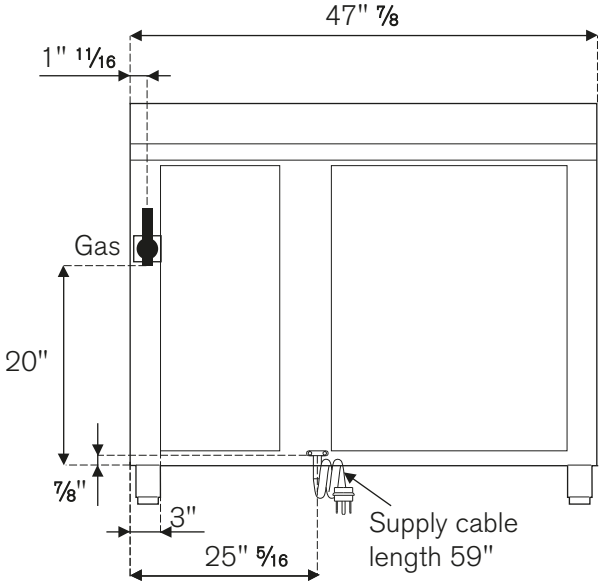
47" 7/8
1" 11/16
Gas
20"
7/8"
3"
25" 5/16
Supply cable
length 59"

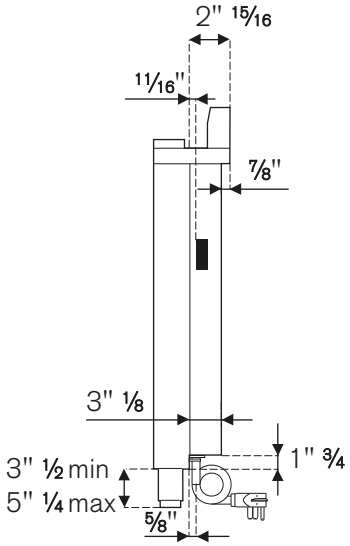
2" 15/16
11/16"
7/8"
3" 1/8
1" 3/4
3" 1/2 min
5" 1/4 max
5/8"