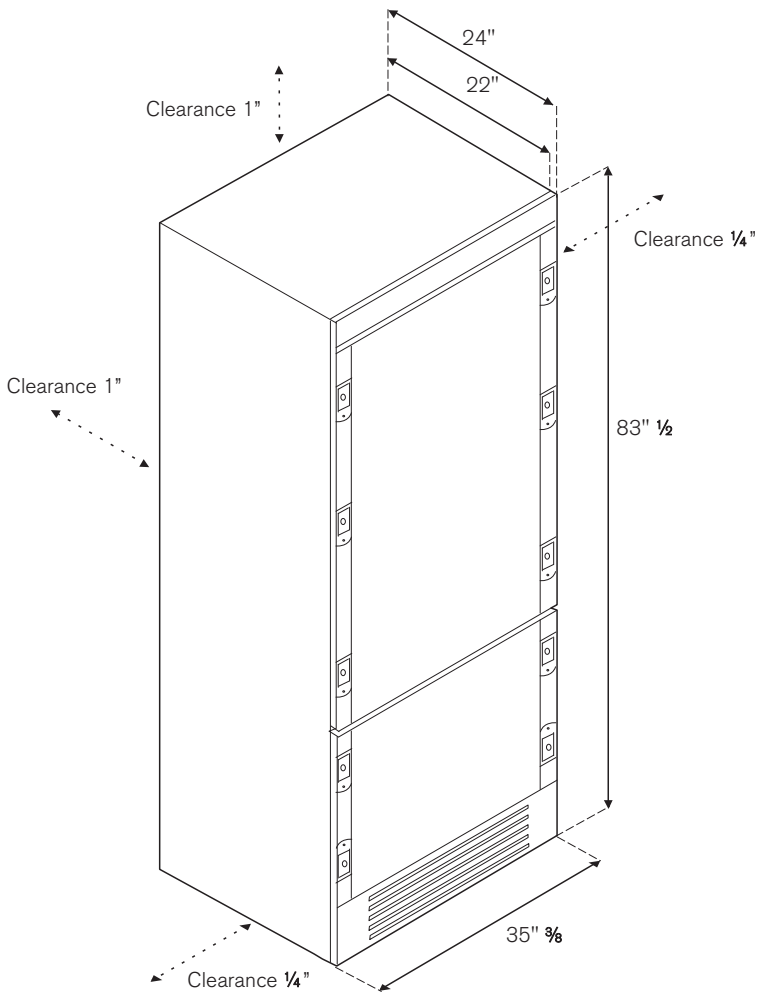
24"
22"
Clearance 1"
Clearance ¼"
Clearance 1"
83" ½
35" ⅜
Clearance ¼"

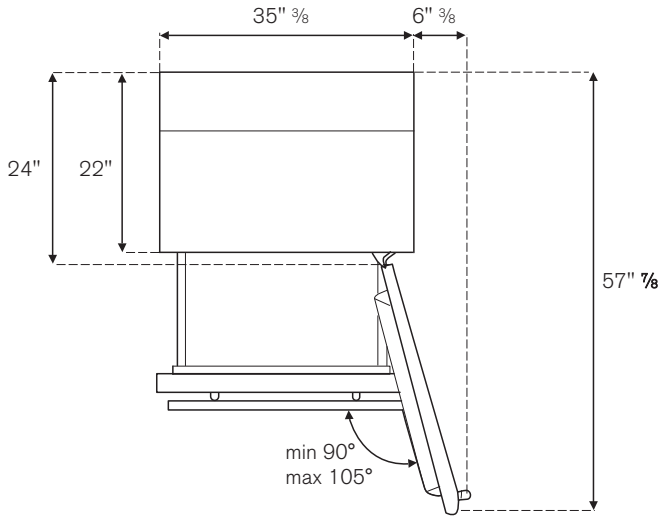
35" ⅜
6" ⅜
24"
22"
57" ⅞
min 90°
max 105°

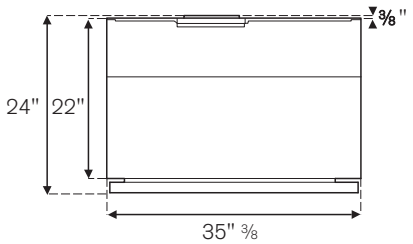
⅜"
24"
22"
35" ⅜