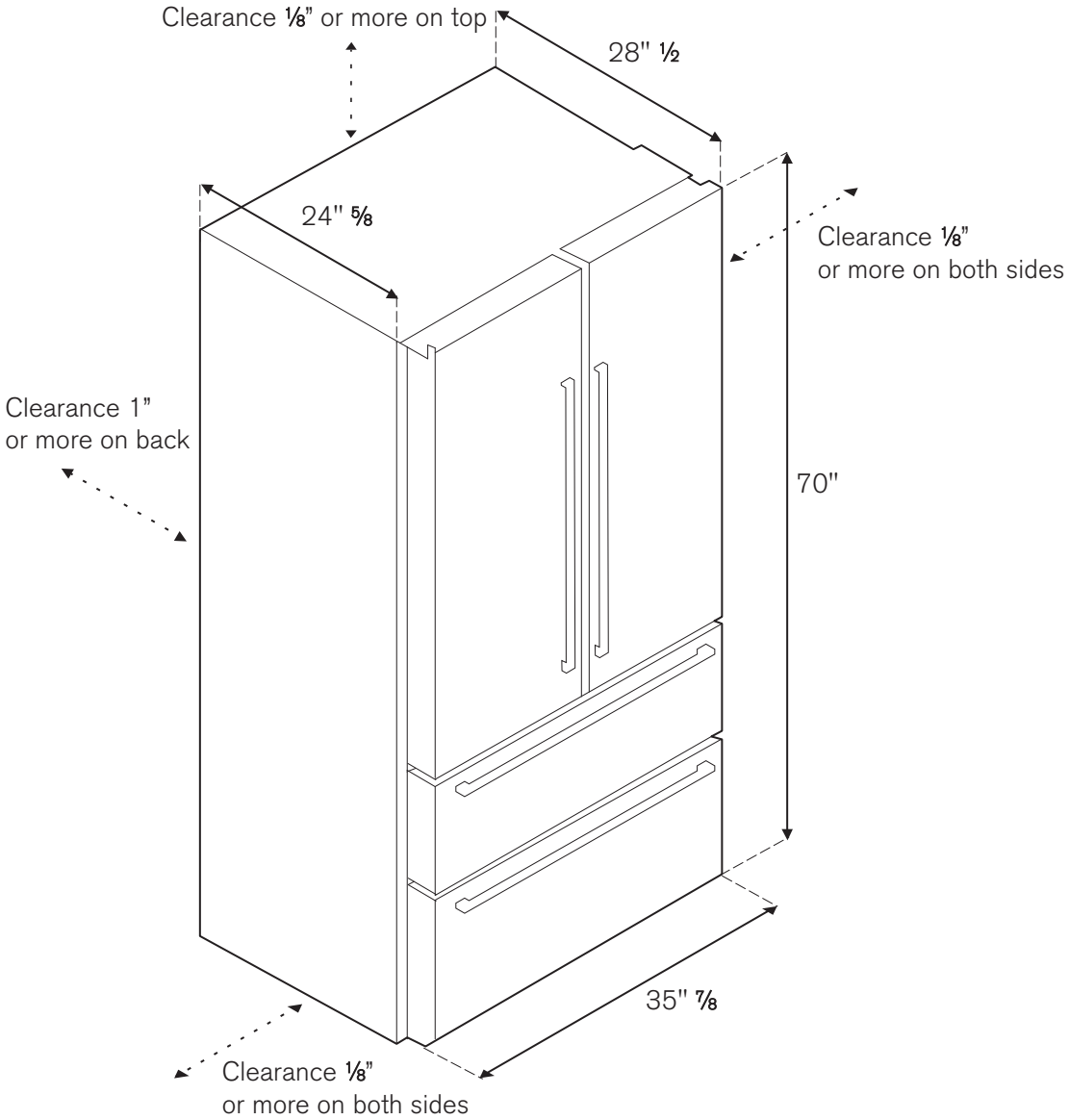
Clearance ⅛" or more on top
28" ½
24" ⅝
Clearance ⅛"
or more on both sides
Clearance 1"
or more on back
70"
35" ⅞
Clearance ⅛"
or more on both sides

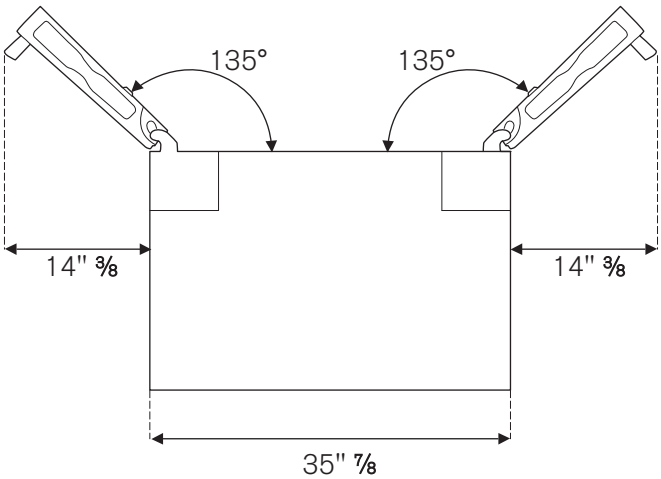
135°
135°
14" ⅜
14" ⅜
35" ⅞